Class H Amplifier Report

Prepared by:

Owen Fabbricatore, Tori Frighetto, Peter Kocour, Ben May

1. Main Product Image

Figure 1. Product Image

Table of Contents

1. Main Product Image **1**

Table of Contents **2**

2. Project Description **3**

3. Methodology in Brief **3**

3.1 Specifications 3

3.2 Protection & Enclosure 4

3.3 Envelope Follower 5

3.4 Rail Splitter 7

3.5 AB Amplifier 8

3.5.1 Transistors 8

3.5.2 General Design 8

3.5.3 Output Stage and Biasing 8

4. Bill of Materials (BOM) **9**

5. Tools Used **12**

6.1 Downloading and Setting Up LTspice 12

6.2 Protection Simulation Setup 13

6.3 Rail Splitter Simulation Setup 13

6.4 AB Amplifier Simulation Setup 14

6.4.1 1 kHz Transient Simulation 14

6.4.2 Total Harmonic Distortion Simulation 15

6.4.3 Noise Simulation 17

6.4.4 Frequency Response Simulation 18

6.5 Hardware Setup 19

6.5.1 Rail Follower Assembly 19

6.5.2 Rail Splitter and AB Amplifier Assembly 19

6.6 Enclosure Assembly 21

7. Characterization Data 23

7.1 Protection Simulations 23

7.2 Rail Splitter Simulations 24

7.4 AB Amplifier Simulations 28

7.4.1 Output Power and Voltage 28

7.4.2 Total Harmonic Distortion 29

7.4.3 Noise and SNR 29

7.4.4 Frequency Response 30

7.5 Physical Testing Data 31

8. Sponsors/Acknowledgements **33**

9. Standards **33**

10. Recommendations for Future Work **34**

11. References..... 34
12. Appendix.....35
ABET Requirement:..... 35

2. Project Description

This project aims to develop a lower-cost Class H amplifier design that can be used not only for audio, but other applications as well with little-to-no modification required. The design is based around a class AB amplifier like many reference designs. Open source designs are uncommon and not well documented for this class of amplifier and commercial designs are expensive. This amplifier design will include clear documentation to allow for easy replicability and modification. Key specifications and their impact on performance have been researched and were used to guide the design process. The design has been broken up into sections and most have been successfully simulated. These sections are shown in the block diagram.

Figure 2. Block Diagram of Class H Amplifier

3. Methodology in Brief

The class H amplifier was broken down into sections to design separately that would fit together in the end. A class H amplifier differs from other amplifier classes due to its modulating supply rails [1]. A class AB amplifier was frequently used in reference designs and is commonly used especially in audio applications, leading that class to be the choice for this design as well.

3.1 Specifications

Specifications were defined throughout the process, both to guide the design and to evaluate the actual performance of the completed design. Common amplifier specifications listed on commercial designs include those shown in Table 1, including more which do not apply, are difficult to set a target for, or are not easily testable. Target values were defined based on typical values and on what was a reasonable goal for this project. The specifications and their values are listed in Table 1.

Table 1: Target Specifications

Specification	Target
Maximum Output Power (Avg)	100 W

Load Impedance	8Ω
Supply	±6-45 V
Frequency Response	Minimum: 20 Hz - 20 kHz
Total Harmonic Distortion (THD)	<1% @ 1kHz
Total Harmonic Distortion + Noise (THD+N)	<1% @ 1kHz
Signal to Noise Ratio (SNR)	≥70 dB
Slew Rate	≥5 V/µs
Efficiency	>50%
Protection	Overvoltage, undervoltage, reverse polarity, undercurrent

The efficiency was selected based on the typical efficiency of an AB amplifier alone and efficiencies that higher-level class H designs achieved. With AB amplifiers typically having efficiency near 50%, the target is to at least improve on that efficiency. The slew rate was determined by the peak voltage that is expected, set by the defined output power and load, and the frequency which is 20 kHz for this calculation. The calculation for the peak voltage is given by

$$\sqrt{100 \times 8} \times \sqrt{2} = 40\,V \tag{3.1}$$

The equation for slew rate is shown below [2].

$$Slew\,Rate = 2\pi \times Frequency \times Peak\,Voltage \tag{3.2}$$

Total harmonic distortion and total harmonic distortion + noise measures how closely the output of the amplifier matches the original signal and lower percentages are better [3]. In audio applications this affects the sound quality and in other applications this applies to inefficiency. Many high quality amplifiers have THD less than 0.05%, but typically below 1% is considered acceptable for audio products [4]. Acceptable THD varies based on application.

3.2 Protection & Enclosure

The Class-H amplifiers safety and protection are maintained through a combination of built in electrical safeguards on the PCB level and passive thermal management into the housing.

3.2.1 Integrated Board Protection

Protection is primarily handled via the built in circuitry on the envelope follower, which has overcurrent, undervoltage, overvoltage, and reverse polarity protection. Overcurrent protection is managed by an ATM mini (automotive mini fuse), while the LTC4367 from analog devices that provides the remaining voltage based safeguards. This IC is rated for -40V to 100V and utilizes a three resistor voltage divider to monitor the supply rails.The threshold limits are calculated as follows.

$$V_{OV\ LIMIT} = 0.5 \times \left(1 + \frac{R_{top} + R_{mid}}{R_{bot}}\right) \tag{3.3}$$

$$V_{UV\ LIMIT} = 0.5 \times \left(1 + \frac{R_{top}}{R_{bot} + R_{mid}}\right) \tag{3.4}$$

Solving the above equations will give three resistors, and the SHDN pin from our example can be ignored.

3.2.2 General Design

The physical enclosure, designed in Autodesk Inventor, was designed as the final layer of protection by addressing thermal dissipation and electrical safety. Key design considerations include:

1. **Thermal Management** - To keep the boards cool, it was decided to use a 12V 50mm fan to blow air across the boards. The design features an intake on the top of the enclosure and carefully placed exhaust vents to direct airflow over the boards.
2. **Component Layout** - The interior is optimized to keep the overall size of the enclosure as small as possible, while still leaving ample space for repair and maintenance. The AB amp is mounted to the bottom plate of the enclosure and the envelope follower is mounted to the top, allowing air to flow over both boards and exhaust out of the front.
3. **Exterior Shape** - Initial designs were simple and boxy, but it was decided to add texture to the enclosure so the amplifier is more appealing aesthetically.
4. **Mechanical Integrity** - The enclosure was developed as three pieces, which prioritizes assembly and 3D printing. It was designed so no supports are needed when 3D printing and assembly requires no more than a dozen screws.

3.3 Envelope Follower

An envelope follower tracks an input signal's amplitude and translates it into a voltage which can control other components in a system [5]. In a class H amplifier the envelope follower is necessary in order to control the AB amplifier's supply voltage based on the input signal. This allows for improved power efficiency. The rail follower is based around the LM5155 in a SEPIC configuration. There are a few

key advantages to using a SEPIC converter over other topologies. The first advantage of a SEPIC converter is that it is a buck/boost topology, this allows a wide output voltage range that can swing above or below the input voltage, this enables the rail follower to accept a wide voltage range from 10V-30V while still outputting the required 100 W. Another advantage is because a SEPIC converter input and output are capacitively coupled, no direct path exists from input to output like in a typical boost converter, this provides an extra layer of safety, ensuring no short circuit can occur across the rail follower. The audio envelope is generated by rectifying an AC audio source which is then fed into an op amp and 2uF capacitor and connected to the feedback pin of the LM5155. This setup creates an envelope with a fast rising edge and slow falling edge. Figure 3 shows the schematic for this circuit. The specifications for the circuit are described in Table 2.

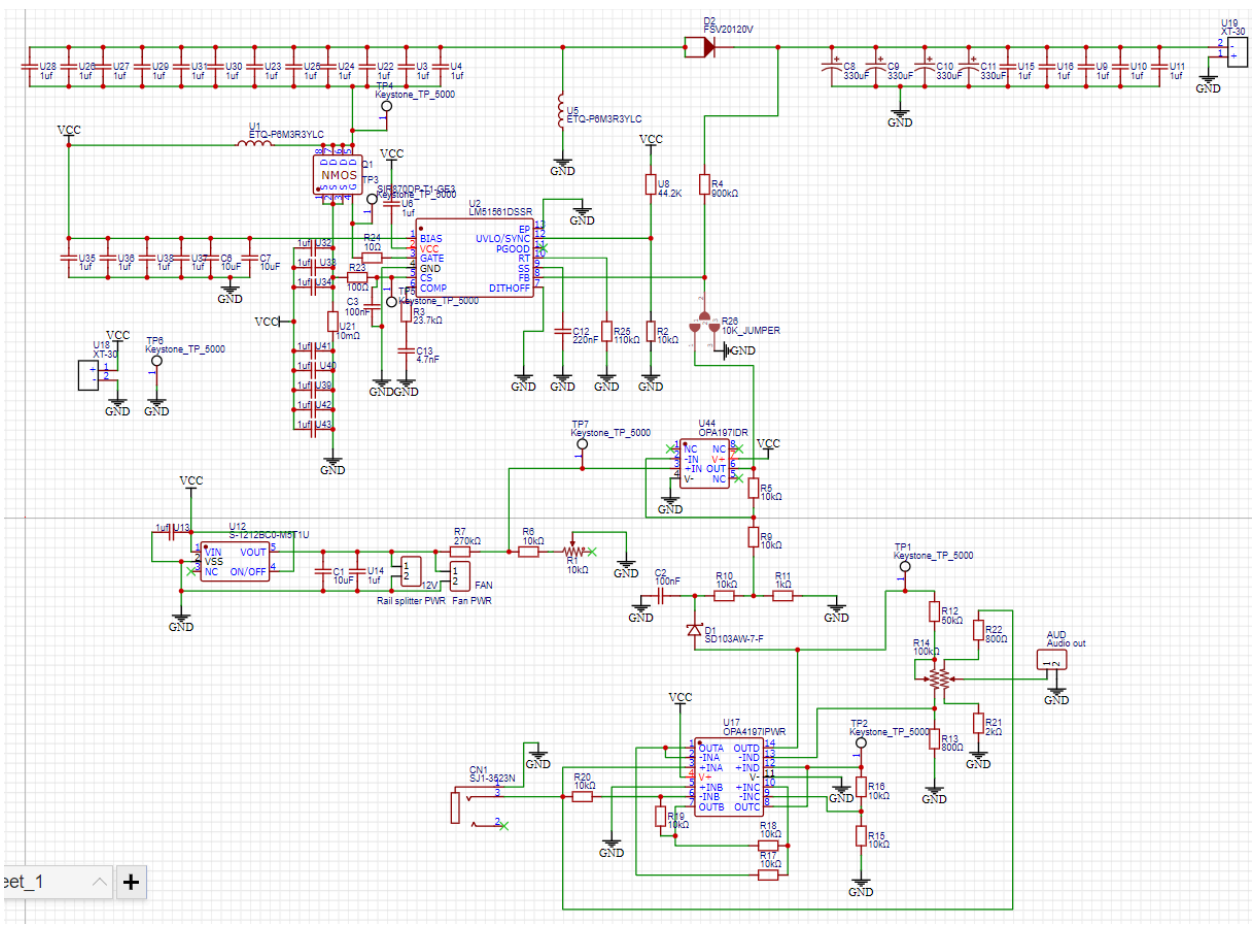

Figure 3: Envelope Follower Schematic

Table 6:Envelope Follower Circuit Specifications

Input Voltage Range	10 V-30 V
Output Power	Up to 300 W
Output Voltage Range	12 V-90 V

Switching Frequency	250 kHz

3.4 Rail Splitter

3.4.1 General Design

The rail splitter topology was based off of a design that was made by MrSlehofer on OSHWLAB and is licensed with a CERN Open Hardware License. The initial design utilizes the IR21531D bridge driver, though this device was at the end of life prior to this project. That component was replaced with the IR21531PBF as the half bridge driver for our design. In addition to this, the original operational amplifier used in the feedback loop was replaced with an AD820, this op amp has a higher slew rate which was intended to help increase the response of the feedback loop and ultimately reduce the amount of ripple in the output voltage rails. In addition, the power management portion of the design was removed as our class H amplifier will already have the needed power rails to power the op amp and IC within this portion. The rest of the design stayed relatively the same with the only change being the wattage values of some components to accommodate the higher voltage levels of our desired output.

3.4.2 Function Overview

The rail splitter works by having a half bridge driver send alternating PWM signals to two SIR870DP-T1-GE3 MOSFETs. One is between the top and middle rail, while the other is between the middle and bottom rail. As the driver output signals the MOSFET alternates between cutoff and triode, allowing for the rails to evenly split between the voltages. Following this stage there is a filter stage which would level the ripple that is created by the oscillations induced by the opening and closing of the MOSFETs. Finally there is a feedback loop that allows the rails to adapt to different loads that are applied. This feedback loop utilizes an op amp that will switch between its rails based on if the output is past a set threshold. This output is then connected to the RC network that controls the frequency of the output of the half bridge driver.

The default PWM frequency that was selected is based on Equation 3.5 and is based on the values that are selected for RT and CT. For our design we choose RT to be 5.6 kΩ and CT to be 1nF using these values and frequency equation it can be determined that the default frequency is around 125 kHz. When the feedback loop is low it drives the network signal high which opens the gate between high and middle. Contrasting this when the feedback loop is high it drives the network low which then closes that gate and opens the gate to ground. This means that when the output is around the desired voltage the feedback will open and close the gates as needed to maintain that value.

$$f = \frac{1}{1.453 * RT * CT} \tag{3.5}$$

The output rail of this segment is the original voltage on the top rail, followed by half of that voltage on the middle rail and then ground on the bottom rail. To get a negative and positive rail the middle rail is utilized at the ground reference moving forward. This allows the bottom rail to be a negative rail and the top rail to be the positive rail. To get the desired range of ±6 - 45V the rail splitter is able to handle an input voltage of 12 - 90V.

3.5 AB Amplifier

The AB amplifier was initially designed and simulated for the high end, ±45 V, of the decided voltage range in order to select components that were rated for the higher voltage. Modifications to the design are still needed to get the AB amplifier to operate correctly at the lower end of the voltage range.

3.5.1 Transistors

Before beginning the design, the use of BJTs or MOSFETs was evaluated to determine which would be most suitable for this design. BJTs offer better linearity than MOSFETs, which is a key factor in this amplifier especially for audio applications. The use of BJTs allows the amplifier to produce a more accurate translation of the output signal. MOSFETs also require careful biasing for gate voltage control which increases the complexity of the design. This is not desirable for the open-source and easily replicable goal of this project. While MOSFETs have better thermal stability and lower power consumption than BJTs, these factors can be managed more easily through thermal considerations in board design [6].

3.5.2 General Design

Various general designs were considered for the AB amplifier such as a fully discrete design with BJTs or MOSFETs, a fully differential design with BJTs or MOSFETs, an op-amp input stage with a discrete output stage, or an IC to handle the input and VAS stage with a discrete output stage. The fully discrete designs would provide great flexibility and performance but would come with more components and complexity. A fully differential design would have high efficiency and lower distortion but high complexity because of common-mode feedback and matched stages, making it harder for others to recreate or modify with understanding. Using an IC for the majority of the amplifier would simplify the design significantly making it easier to reproduce as well as decrease the size, but there is less flexibility and limitations in IC availability. An op-amp was chosen for the input stage because it simplifies the design by setting gain and feedback. It can potentially limit performance and there is less control over gain structure, but there is a wide selection of op-amps available with high slew rates and low noise that are also compatible with high voltage rails.

3.5.3 Output Stage and Biasing

The class AB output stage, a combination of class A and class B output stages, has two complementary output transistors like a class B output stage but they are biased at small current to reduce crossover distortion. The crossover distortion that would appear in the similar class B stage is reduced because there is a smooth transition between transistor conduction as voltage changes [7]. A class AB output stage is not the most efficient, typically around 50%, but it balances the advantages and disadvantages of the class A and class B designs, specifically linearity and efficiency [8]. Class AB amplifiers are also very common, especially in audio, which gives the advantage of more reference designs to evaluate and learn from. The lower efficiency of the AB output stage over another output

stage, like a class D, is not critical because the circuitry added to make it a class H amplifier improves this efficiency.

Biasing methods were considered to supply the base currents for the output stage. Two common methods were evaluated that would both provide thermal stability which was an important consideration due to the power dissipation from the output stage that could damage the output transistors [7]. Diodes are a simple method that would protect the output transistors from damage. A V_{BE} multiplier was used instead of diodes because it provides greater flexibility in the voltage value that sets the quiescent current. Figure 4 shows the V_{BE} multiplier configuration for biasing an AB output stage.

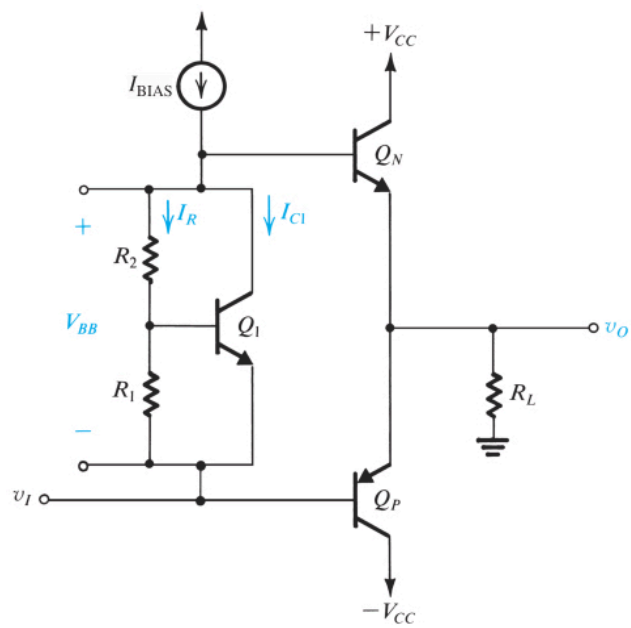

Figure 4: V_{BE} Multiplier [7]

4. Bill of Materials (BOM)

Table 3: Rail Follower

Part Description	Part Number	Quantity	Unit Cost	Total Cost
3.3 µH Sepic Inductor	ETQ-P8M3R3JFA	2	$2.34	$4.68
1 µF Sepic Medium Frequency cap	CL31B105KCHNFNE	50	$0.10	$5.21
Mosfet N-Channel 100V	SIR870DP-T1-GE3	1	$3.23	$3.23
120 V 20A Output Diode	FSV20120V	1	$1.30	$1.30
10 mOhms 3W Shunt Resistor	CRA2512-FZ-R010ELF	2	$0.55	$1.10

0.22 µF Soft Start Capacitor	C3216X7R2A224K115AA	1	$0.26	$0.26
44.2 kOhms Rt resistor	CRCW040244K2FKEDC	3	$0.10	$0.30
10 kOhm Resistor	RC0402FR-0710KL	4	$0.10	$0.40
22 kOhms Comp Resistor	ERA-2AEB223X	1	$0.10	$0.10
4700 pF Comp Capacitor	GRM155R72A472KA01D	1	$0.10	$0.10
330 µF Output Filter Capacitor	EKXJ161ELL331MK50S	4	$2.98	$11.92
Test Points	36-5000-ND	7	$0.28	$1.96
XT-30	FIT0586	2	$1.90	$3.80
7.5 kOhm Resistor	ERA-2AEB752X	3	$0.10	$0.30
110 kOhm Resistor	311-110KLRCT-ND	1	$0.10	$0.10
10 µF ±10% 50V Input Capacitors	CL31A106KBHNNNE	10	$0.21	$2.10
TL072CDT Op-Amp	TL072CDT	1	$0.37	$0.37
10 kOhm Potentiometer	PDB181-K220K-103B	1	$1.40	$1.40
Signal Rectifier	BAS4002ARPPE6327HTSA1	1	$0.32	$0.32
3.5mm Audio Jack	SJ1-3523N	1	$0.91	$0.91

Table 4: Rail Splitter

Part Description	**Part Number**	**Quantity**	**Unit Cost**	**Total Cost**
Half-Bridge Gate Driver IC	IRS21531DSTRPBFCT-ND	2	$1.24	$2.48
MOSFET N-CH 100V	SIR870DP-T1-GE3CT-ND	4	$3.23	$12.92
AD820ARZ Op-Amp	505-AD820ARZ-ND	2	$9.11	$18.22
10uH Inductor	PCD2433CT-ND	5	$1.13	$5.65
Zener Diode	1655-SK56BCT-ND	5	$0.49	$2.45
5.6K 0.1% 1/10W	YAG1699CT-ND	10	$0.06	$0.59
1nF 1% 25V	399-C0603C102F3GACTUCT-ND	10	$0.50	$5.04
10 µF ±20% 100V	490-GRM32EC72A106ME05KCT-ND	15	$0.64	$9.56
10 µF ±10% 25V	399-11939-1-ND	10	$0.13	$1.26
470 µF 100 V	493-1379-ND	10	$1.09	$10.92
47 µF 100 V	493-1147-ND	10	$0.28	$2.80
10k Trimmer Pot	TC33X-103ECT-ND	3	$0.25	$0.75
2200 pF ±20% 25V Ceramic	399-C0603C222M3RACTU	10	$0.15	$1.47

	CT-ND			
0.1 µF ±10% 25V Ceramic	399-C0603C104K3RACTUCT-ND	10	$0.01	$0.10
33 kOhms ±0.1% 0.1W	P33KDBCT-ND	10	$0.06	$0.61
330 Ohms ±5% 0.1W	311-330GRCT-ND	10	$0.02	$0.20
3.9 kOhms ±1% 0.1W	RMCF0603FT3K90CT-ND	10	$0.01	$0.06
12 kOhms ±0.1% 0.1W	P12KDBCT-ND	10	$0.06	$0.61
3.3 kOhms ±1% 0.1W	RMCF0603FT3K30CT-ND	10	$0.01	$0.06
82 kOhms ±5% 0.1W	311-82KGRCT-ND	10	$0.01	$0.07
4.7 kOhms ±1% 0.1W	RMCF0603FT4K70CT-ND	10	$0.01	$0.06
10 Ohms ±1% 0.1W	RMCF0603FT10R0CT-ND	10	$0.01	$0.06
1.5 kOhms ±1% 0.25W	RHM1.50KADCT-ND	10	$0.08	$0.75
Test Point	36-5005-ND	30	$0.26	$7.68

Table 5: AB Amplifier

Part Number	**Part Description**	**Quantity**	**Unit Cost**	**Total Cost**
OPA454 Op-amp	296-41370-2-ND	1	$7.18	$7.18
Output PNP BJT 250 V 16 A	MJL21193GOS-ND	1	$6.26	$6.26
Output NPN BJT 250 V 16 A	MJL21194GOS-ND	1	$6.26	$6.26
Driver PNP BJT 250 V 8 A	MJE15033GOS-ND	2	$2.10	$4.20
Driver NPN BJT 250 V 8 A	MJE15032GOS-ND	2	$2.10	$4.20
NPN 160V 1.5A	TTC004BQ-ND	3	$0.90	$2.70
PNP 160V 1.5A	TTA004BQ-ND	2	$0.81	$1.62
Output Emitter Resistors 12W	541-WSLF3222L4000FE6CT-ND	2	$3.01	$6.02
40 kOhm Resistor 1/4W	541-CRCW080540K0FKEACT-ND	2	$0.12	$0.24
20 kOhm Resistor 1/4W	541-4187-1-ND	1	$0.10	$0.10
1 kOhm Resistor 1/4W	541-1.00KCCT-ND	2	$0.10	$0.20
1.1 kOhm Resistor 1/4W	541-1.10KCCT-ND	1	$0.10	$0.10
3.6 kOhm Resistor 1/4W	311-3.60KFRCT-ND	1	$0.10	$0.10
100 Ohm resistor 1/4W	541-100CCT-ND	3	$0.10	$0.30
1 nF Filter Capacitor	709-VPDD202W102K1GV001ECT-ND	1	$0.17	$0.17

0.1 µF Bypass Capacitors	399-C1206C104K5RACTUCT-ND	2	$0.08	$0.16
30 pF Capacitor	478-12065A300JAT2ACT-ND	1	$0.28	$0.28
330 Ohm Resistor 1/2W	1712-CRGH1206F330RCT-ND	1	$0.10	$0.10
1 kOhm Potentiometer	118-PV36W102C01B00-ND	1	$1.53	$1.53

Table 6: Enclosure

Part	Qty	Link	Cost
#2 x 1/4" Pan Head Sheet Metal Screw	12	Link	$7.49
3mm x 20mm Hex Bolt	4	Link	$7.49
M3-0.5mm Hex Nut	4	Link	$9.99

5. Tools Used

Table 7: Tools Used

Part Number	Part Description	Quantity	Unit Cost	Total Cost
FX888DX-010BY	Soldering Iron	1	$122.99	$122.99
DOS1102	Oscilloscope	1	$135.99	$135.99
B07BR3F9N6	3D Printer	1	$169.00	$169.00

Software Used:

- LTspice: https://www.analog.com/en/resources/design-tools-and-calculators/ltspice-simulator.html
- KiCAD: https://www.kicad.org/download/

6. Assembly Instructions

6.1 Downloading and Setting Up LTspice

1. Go to https://www.analog.com/en/resources/design-tools-and-calculators/ltspice-simulator.html
2. Choose the correct download for your operating system (Windows or Mac)
3. Download the schematic, symbol, and model files from github at https://github.com/OSHE-Github/Class-H-Amplifier

4. Put the downloaded files in your LTspice folder in Documents/LTspice
5. To open the schematic files, double click on them in the folder or open within LTspice by choosing File -> Open and then select an LTspice Schematic File

6.2 Protection Simulation Setup

1. Open the LTC4367_12_20.asc file in LTspice
2. Use the following for the voltage source
    a. PWL(0 0 10m 15 50m 15 51m 22 100m 22 101m 15 150m 15 151m 10 200m 10 201m 15 250m 15 251m -15 300m -15)
3. Right click on the .dc directive to run a voltage sweep simulation
4. Run the simulation
5. Click on Vout and Vin to view the waveforms on the plot

6.3 Rail Splitter Simulation Setup

1. Open the Rail_Splitter_Sim.asc file in LTspice
2. Right click on the voltage source V2 circled in red in Figure 5

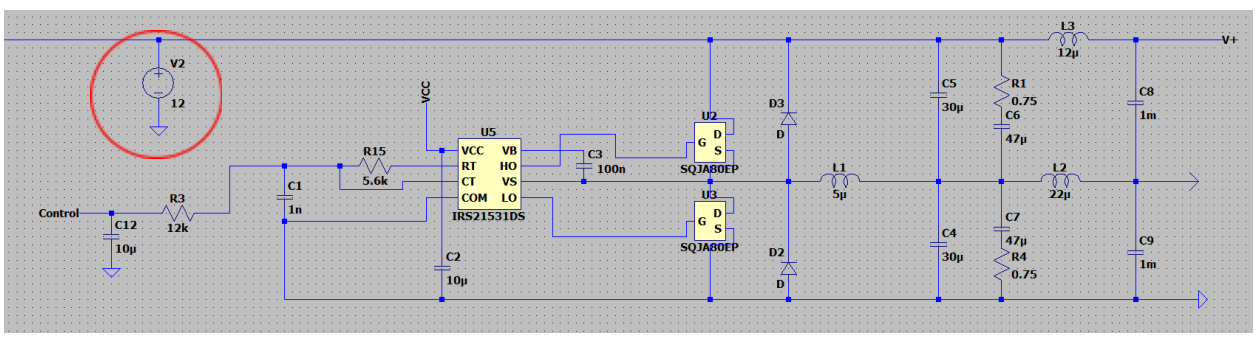

Figure 5: Rail Splitter

3. In the voltage source settings window set the voltage to twice the values you want your rails to be

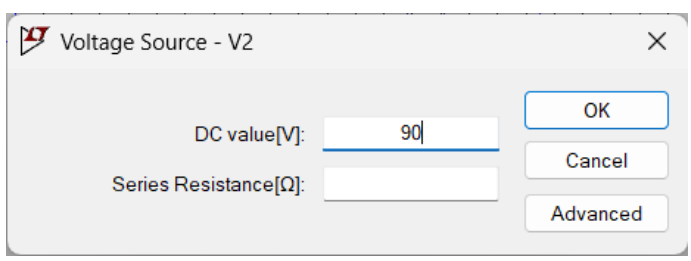

Figure 6: Voltage Source Settings

4. Select the run button in the top right corner, or press alt+r on the keyboard
5. Probe the value of V+ and COM (the middle rail)
    a. Confirm that the rails properly split your desired voltage
6. Probe around the circuit to measure any other desired values

6.4 AB Amplifier Simulation Setup

6.4.1 1 kHz Transient Simulation

1. Open the ABAmp_models85.asc file in LTspice
2. Right click on the voltage source V3 and choose SINE under functions.
3. Below the functions, enter the following parameters
    a. Amplitude[V]: 1
    b. Freq[Hz]: 1k
    c. Ncycles: 16 - this can be changed
    d. The other parameters can be left at 0

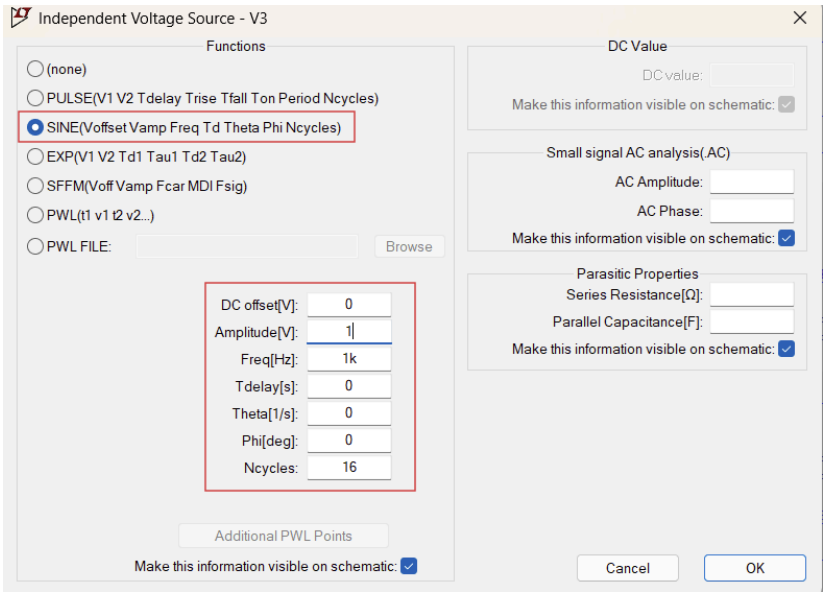

Figure 7: Voltage Source Configuration Window

4. Right click on the text ".tran 0 16ms 0 0.488u"
    a. This is the syntax to run the transient simulation. The amount of time (16ms) for the simulation to run can be changed, but should run for at least a few milliseconds for it to stabilize.
    b. The maximum timestep (0.488u) can also be changed and may give slightly different results but will mostly be the same. Too high of a max timestep may prevent the simulation from converging.

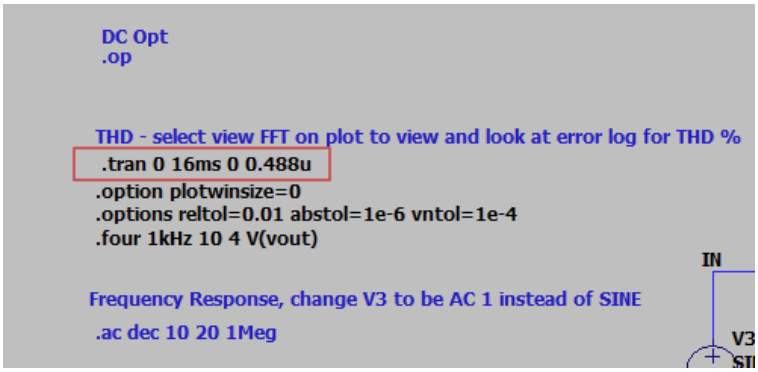

Figure 8: Transient Simulation Directive

5. Click OK
6. Press the Run button on the toolbar
7. The details of the simulation running will be shown at the bottom of the screen
8. A window will pop up that may show waveforms already selected or it may be blank
    a. If blank, click on the Vout signal on the schematic and the waveform will appear in the other window. Alt + click on the resistor RL will bring up the waveform showing the output power
9. CTRL + click on the trace names will bring up a small window showing the RMS value of the signal and the average value
    a. Here the RMS output voltage and the average power can be seen
10. The input voltage V3 can be adjusted by increasing the amplitude
    a. 1.5 V amplitude gives the maximum average output power. Increasing beyond that the simulation will fail to converge. This issue is being worked on

6.4.2 Total Harmonic Distortion Simulation

1. This simulation uses the same input voltage settings and the same .tran analysis. The directive .four 1kHz 10 4 V(vout) is already included to view the FFT and THD
2. With a 1V amplitude, rerun the transient simulation

3. Right click anywhere on the plot and choose View -> FFT

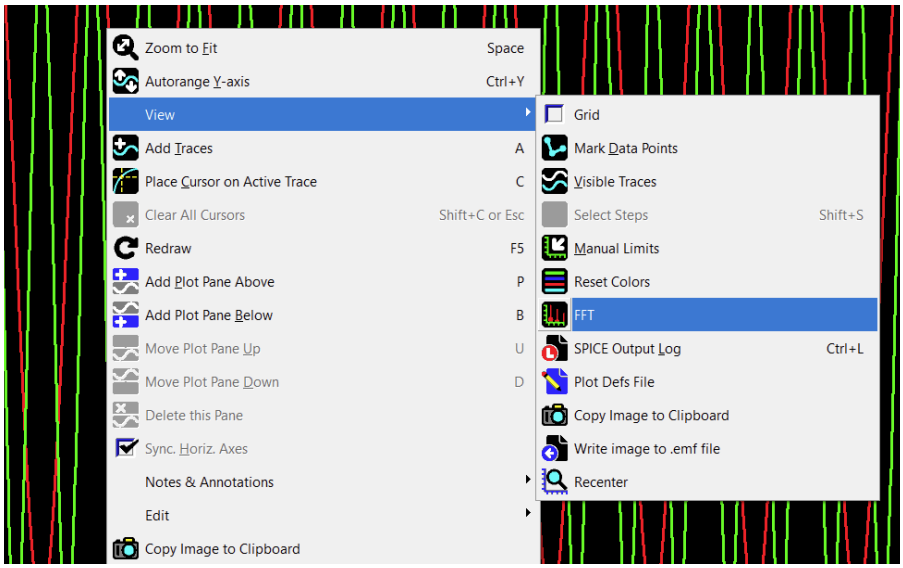

Figure 9: View FFT Option

4. A window will pop up with settings, shown below

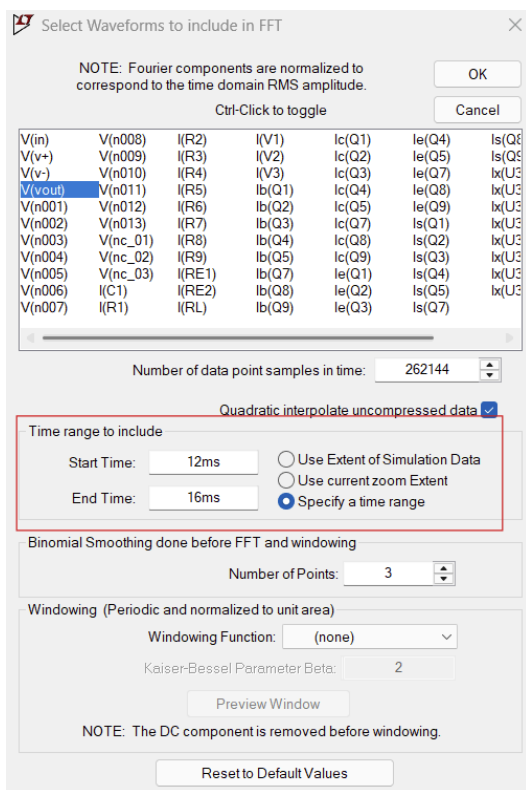

Figure 10: FFT Settings

5. Under time range select “Specify a time range” and use the simulation time for the end time and use the end time - 4ms for the start time

6. Click OK and the FFT plot will appear. The resolution will change depending on the timestep used in the simulation
7. Hit CTRL + L and the Spice Output Log will pop up
8. Scroll to the bottom to see the Fourier components details and the partial and total harmonic distortion

6.4.3 Noise Simulation

1. In the schematic window right click on the directive .noise V(vout) V3 dec 20 20 20k
2. A window with options to configure the analysis will appear. The current configuration is shown below

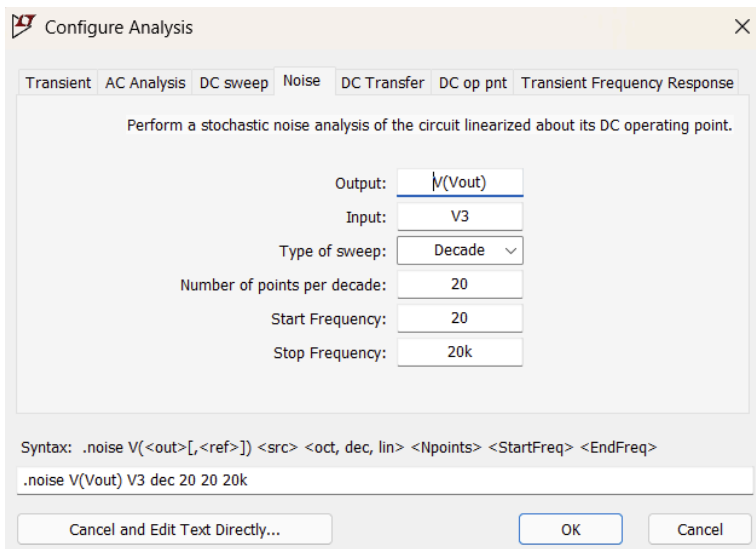

Figure 11: Noise Simulation Configuration

3. Change the settings if necessary and hit OK
4. Run the simulation
5. A blank plot will open, click on Vout on the schematic to plot that signal
6. CTRL + left click on the trace name v(onoise) will bring up a window with the total RMS noise

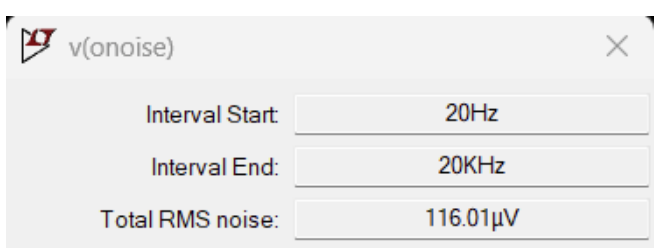

Figure 12: Noise Details Window

6.4.4 Frequency Response Simulation

1. Change the input voltage V3 to an AC 1 source by using the configuration shown below

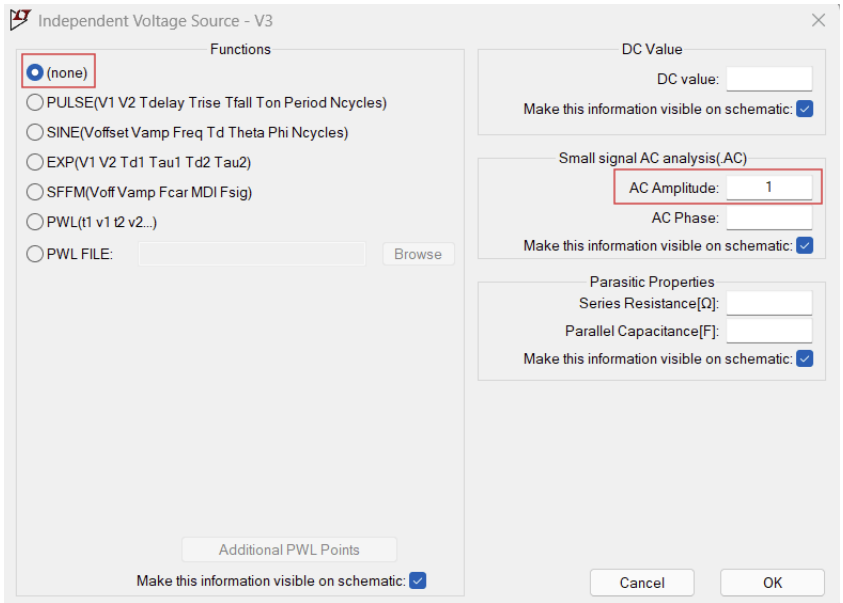

Figure 13: Voltage Configuration for Frequency Response Simulation

2. Right click on the directive .ac dec 10 20 1Meg
3. A window to configure the analysis will appear
    a. The current configuration is a decade sweep with 10 points per decade from 20 Hz to 1 MHz
4. Hit OK and run the simulation
5. A blank plot window will appear
6. Click on Vout on the schematic window and the plot will appear with the frequency response
7. Left click on the trace name and a cursor will appear. Leave this cursor on the flat slope
8. Left click again on the trace and a second cursor will appear
9. Drag this cursor to the right until there is a difference of about 3dB between the two cursor magnitudes

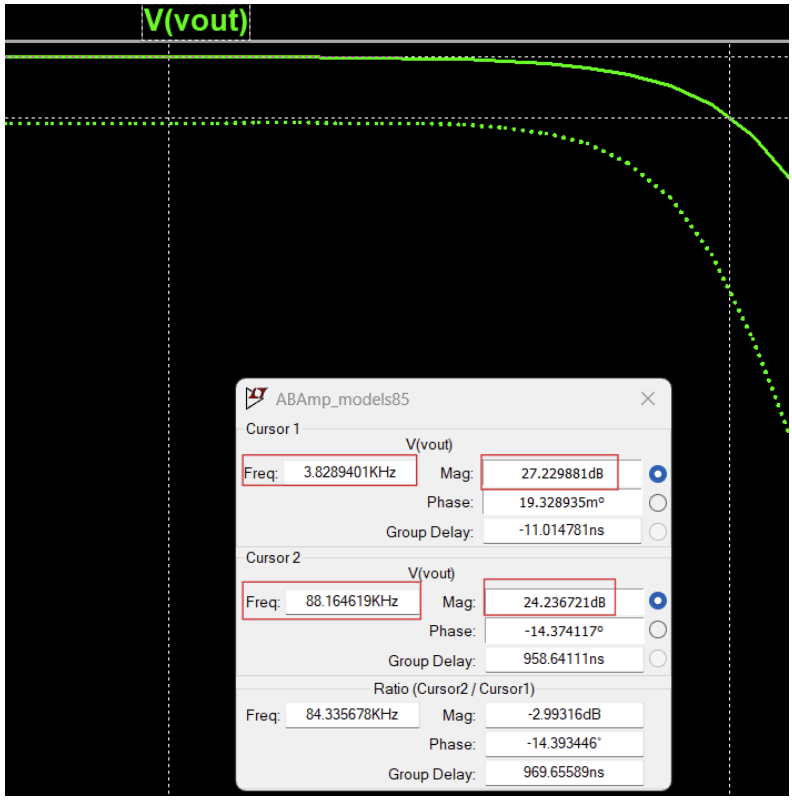

Figure 14: Frequency Response Plot Cursor Details

10. The frequency response will be the frequency at cursor 1 to the frequency at cursor 2

6.5 Hardware Setup

6.5.1 Rail Follower Assembly

Following the schematic for the Rail follower and the bill of materials in section 4, place each component in its corresponding location on the PCB. The KiCAD file for the PCB can be found here: https://github.com/OSHE-Github/Class-H-Amplifier/tree/main/ClassH_PCB/envelope_follower

6.5.2 Rail Splitter and AB Amplifier Assembly

Following the schematics for the rail splitter in Figure 15 and the AB amplifier in Figure 16, along with the Bill of Materials and the reference designators, place each component onto the corresponding location on the PCB in Figure 17. All KiCAD files can be found on our GitHub under “ClassH_PCB_FINAL” at https://github.com/OSHE-Github/Class-H-Amplifier/tree/main/ClassH_PCB

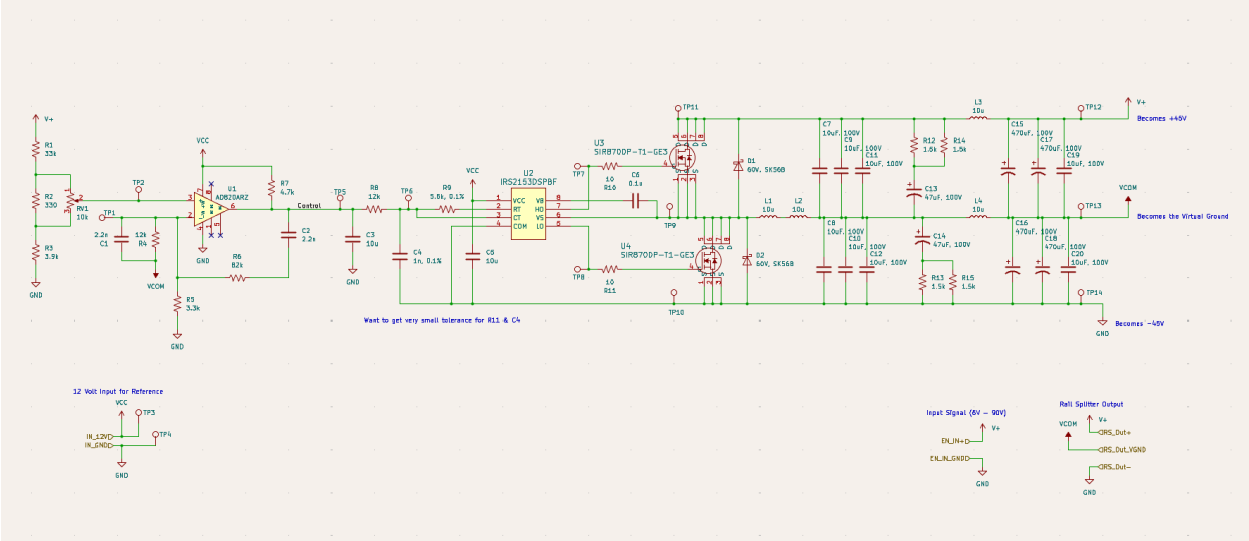

Figure 15: Rail Splitter Schematic

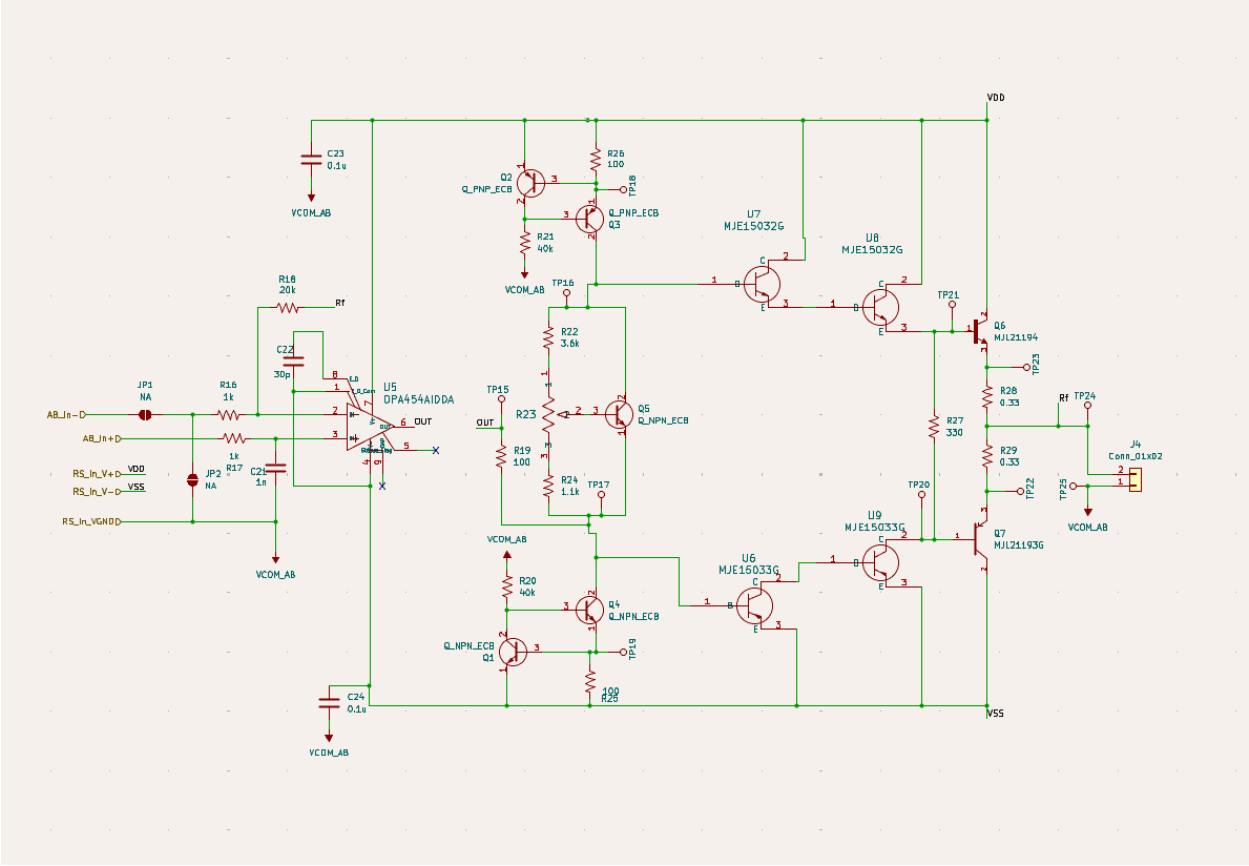

Figure 16: AB Amplifier Schematic

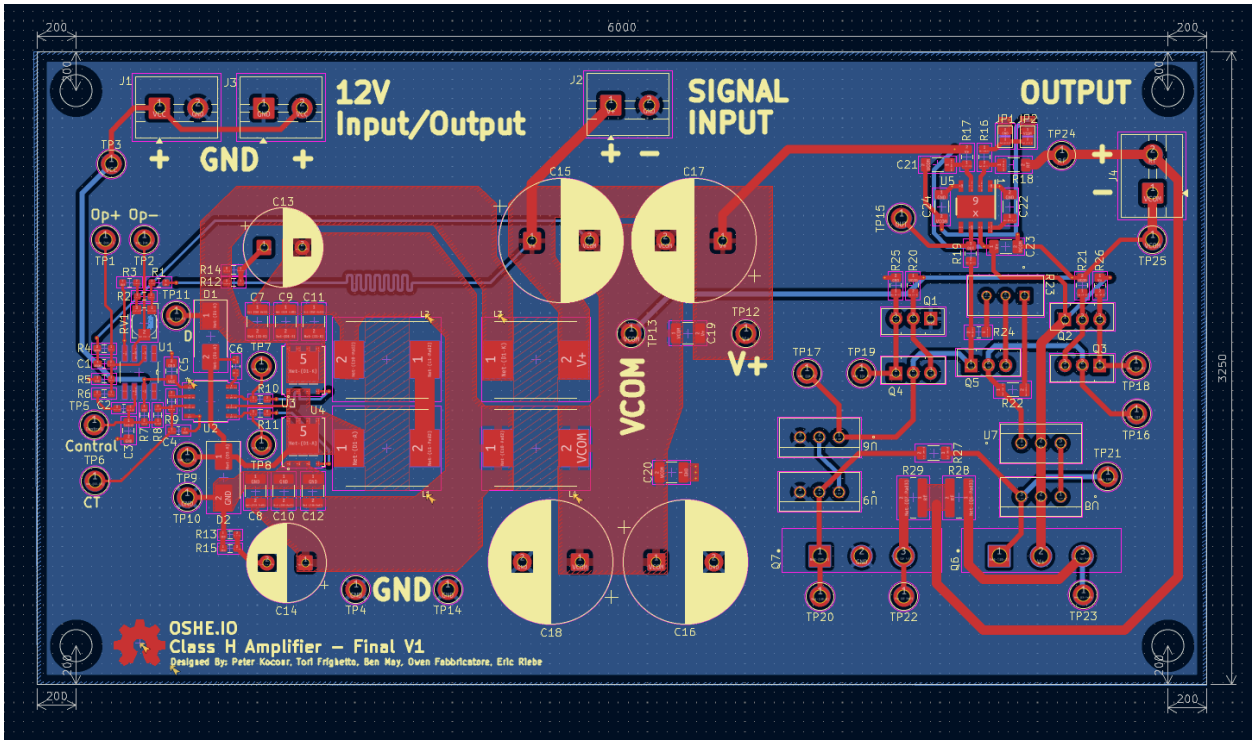

Figure 17: Rail Splitter & AB Amplifier PCB

6.6 Enclosure Assembly

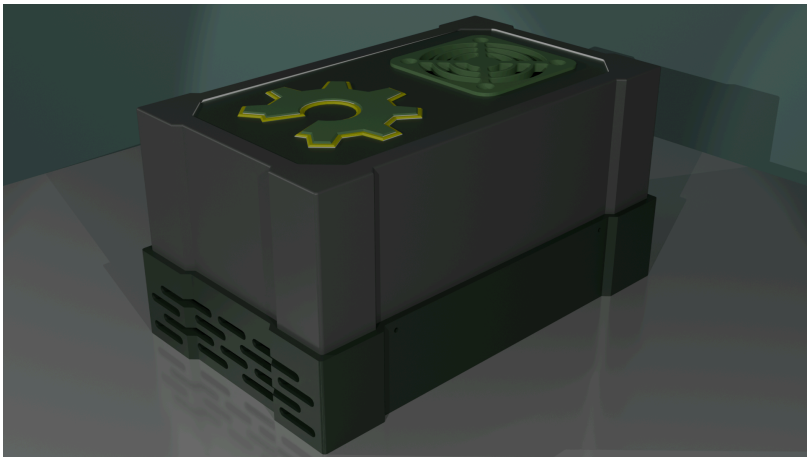

Figure 18: Assembled Enclosure Render

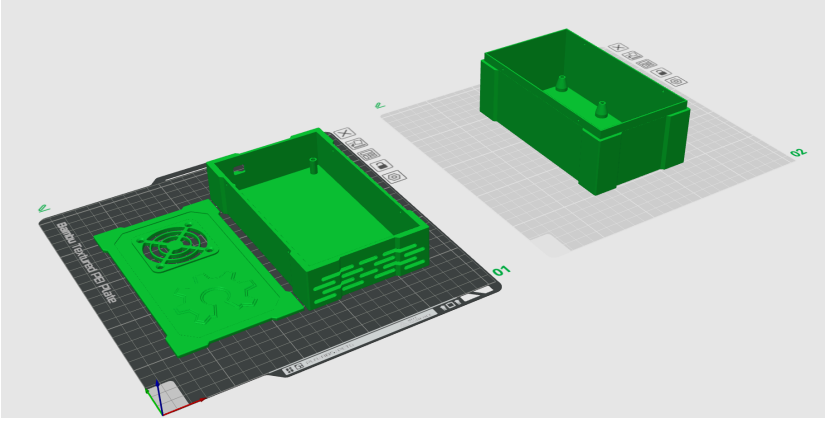

Figure 19: Printing Plate Layout

The enclosure for the Class-H amplifier consists of three distinct parts: The bottom piece, (second from left, figure above) the middle piece (printed upside down, right in figure above), and the top piece (left, figure above.)

The bottom and middle pieces are carefully designed to fit perfectly together, with a tolerance of **0.1mm**. If your printer cannot handle this tolerance, it is recommended to scale the middle piece on all axes slightly to ensure a good fit.

6.6.1 Enclosure 3D Printing

It is recommended to use the default print settings for all pieces. However, in testing it was found that 5% infill of any shape worked best, and ironing specifically for the top piece helped enhance the quality of the print. The layout shown above is the best, and rotating any of the pieces is not recommended. The size of the build plate in the image is **256mm^3** , but it may be printed on as small as **180mm^3** ,with each piece being on its own plate.

6.6.2 Enclosure Assembly

To assemble the enclosure you will need the times listed in Table 6.

The #2 x 1/4" Pan Head Sheet Metal Screws are used to connect the rail splitter + AB amplifier board and envelope follower board and to the enclosure on the bottom and top, respectively. They are also used on either side of the enclosure to secure the bottom piece to the middle piece.

The 3mm x 20mm Hex Bolts are used to secure the 50mm x 50mm fan attached to the top of the enclosure. They do not thread in similar to the other screws, and they require nuts attached to the underside of the top piece to secure the fan.

The figure on the left below shows the four mounting holes for the 50mm x 50mm fan and the right image shows the holes for the screws to secure the middle and bottom piece.

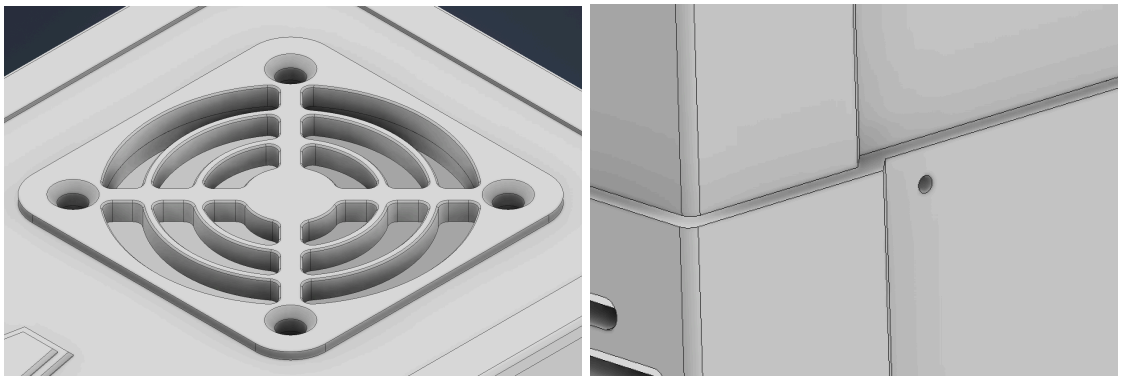

7. Characterization Data

7.1 Protection Simulations

For the protection of the amplifier the LTC4367 IC was used. This allowed for the protection parameters to be set as seen in Table 8. These values were then tested using the LTspice simulation with the out being seen in Figure 15. This figure shows the inputted voltage in green and the voltage supplies to the amplifier in blue. It can be seen that when in reverse bias the voltage is blocked. Also when the voltage is below 12V or above 20V the output voltage is set to 0V. This was the intended result of the protection stage to allow for safe use.

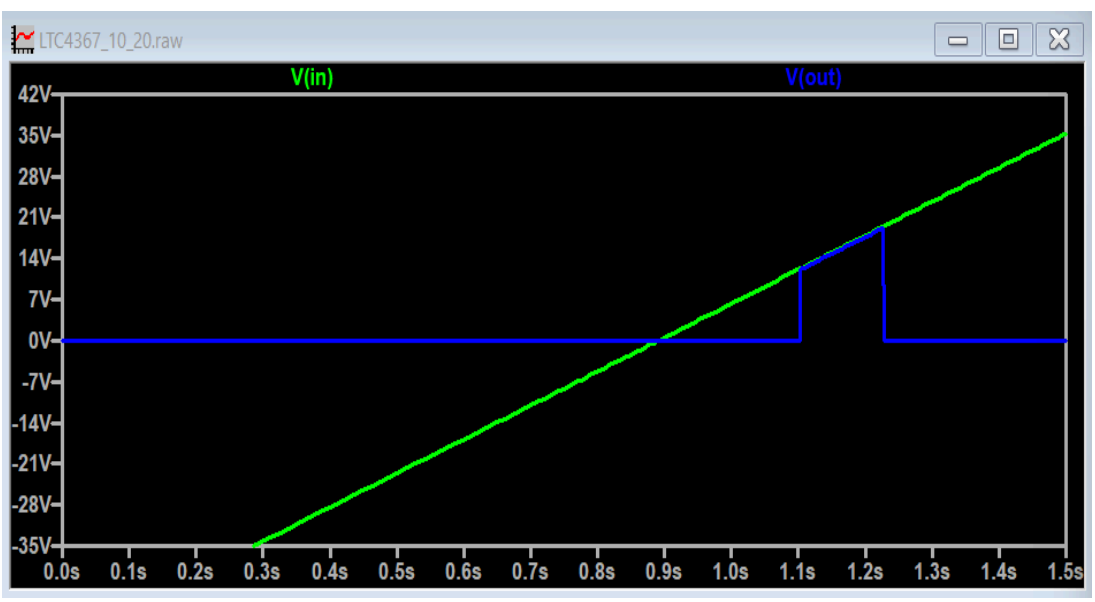

Figure 20: LTC4367 DC Sweep Simulation

Table 8: Protection Parameters

Protection Type	Protection Parameters
Over Voltage Protection	20V - 100V

Under Voltage Protection	0V - 12V
Reverse Polarity	-40V - 0V
Over Current	ATM Mini Fuse

7.2 Rail Splitter Simulations

The rail splitter was simulated at various V+ values within the rail splitter's input voltage range of 12-90 V. At the low end of the range with V+ = 12V, shown in Figure 21, the Vcom value is approximately half the V+ value and that value is shown in Figure 22.

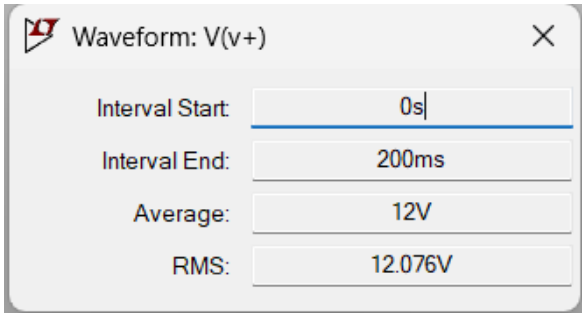

Figure 21. 12V V+

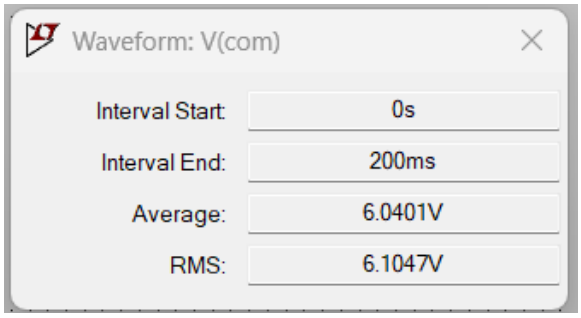

Figure 22. Vcom Value at V+ = 12V

At this input voltage, V+ experiences ripple, which is measured with the recorded value in Figure 23. Figure 24 shows the two waveforms.

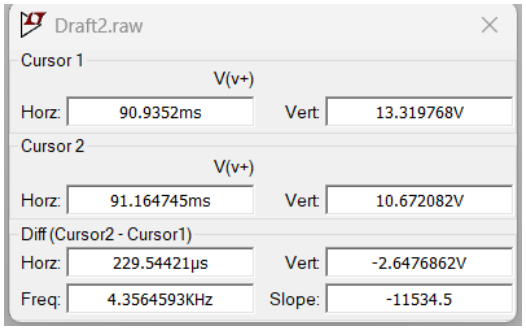

Figure 23: V+ Voltage Ripple

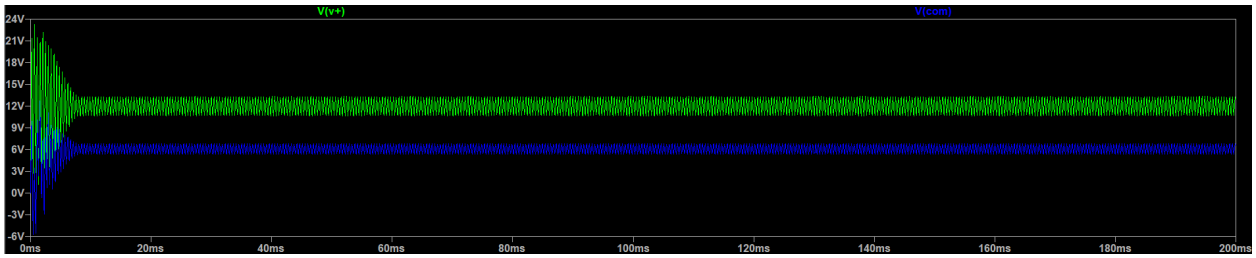

Figure 24: V+ and Vcom Waveforms at V+ = 12V

The rail splitter functions as expected with a V+ value of 40V, shown in Figure 25. The Vcom value is again approximately half the V+ value and Vcom's average voltage measurement is seen in Figure 26. Ripple was still present but stayed very close to the same value as the ripple seen with V+ = 12V. Figure 27 shows the waveforms Vcom and V+ with V+ = 40V.

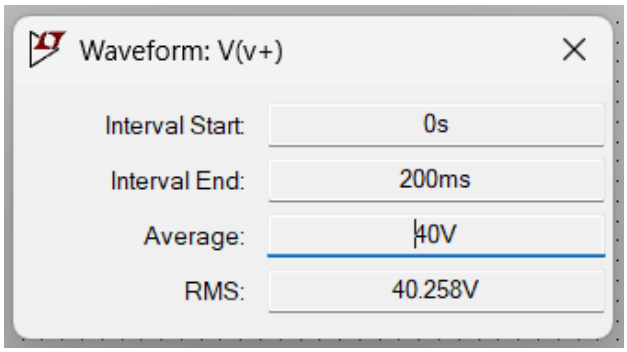

Figure 25. 40V V+

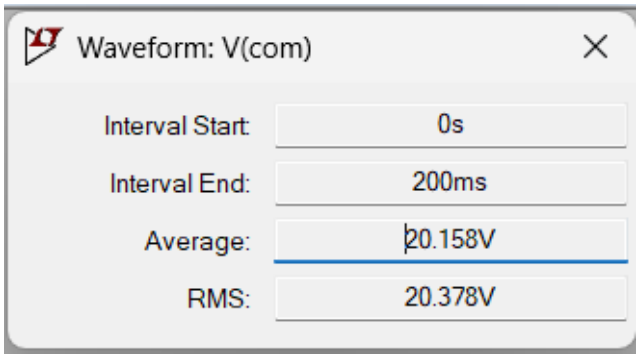

Figure 26: Vcom

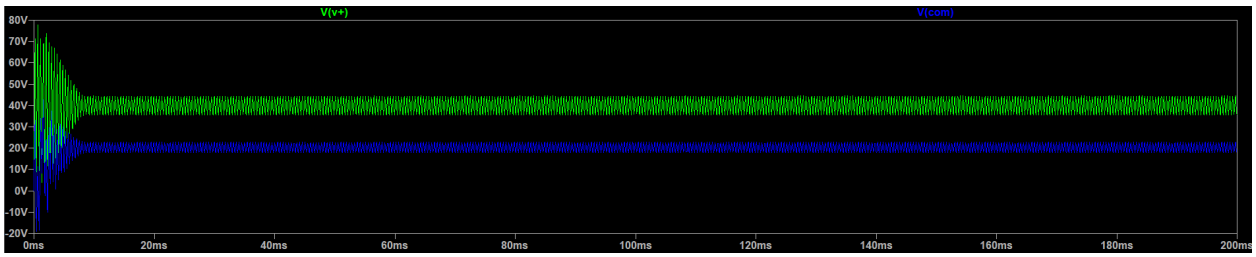

Figure 27: V+ and Vcom Waveforms at V+ = 40V

The rail splitter also functions as expected at higher values with a V+ value of 84V, shown in Figure 28. The Vcom value is again approximately half the V+ value and Vcom's average voltage measurement is seen in Figure 24. Ripple did not vary significantly from the values seen at other V+ values. Figure 29 shows the waveforms Vcom and V+ with V+ = 84V.

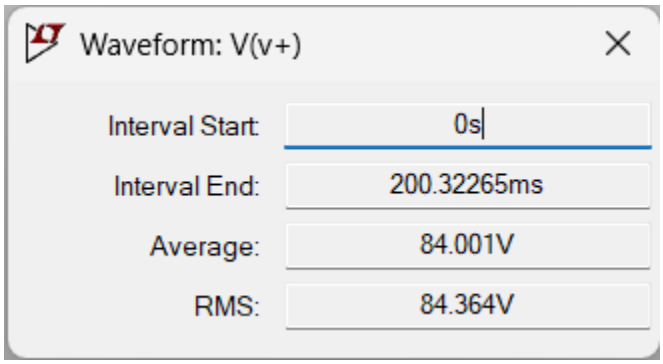

Figure 28. 84V V+

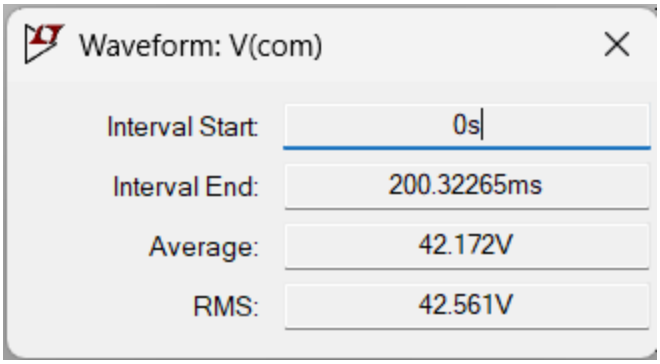

Figure 29. Vcom Value at V+ = 84V

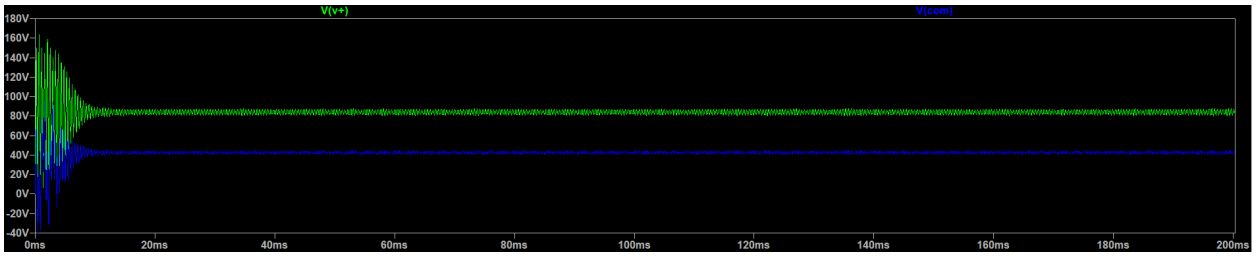

Figure 30: V+ and Vcom Waveforms at V+ = 84V

At V+ values above 85 V the rail splitter stops functioning properly. With V+ at 90 V, shown in Figure 31 , Vcom is measured at an average of 12.176 V, seen in Figure 32, instead of the expected Vcom value of 45 V. Figure 33 shows the waveforms of the two signals when the rail splitter breaks down.

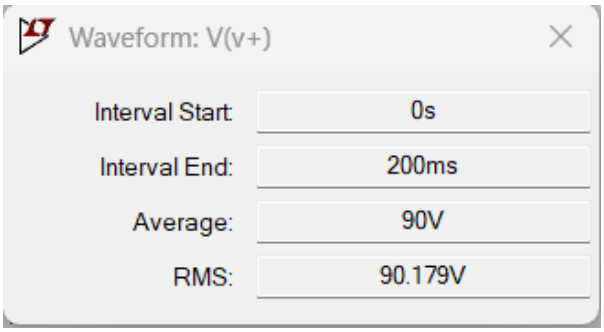

Figure 32. 90V V+

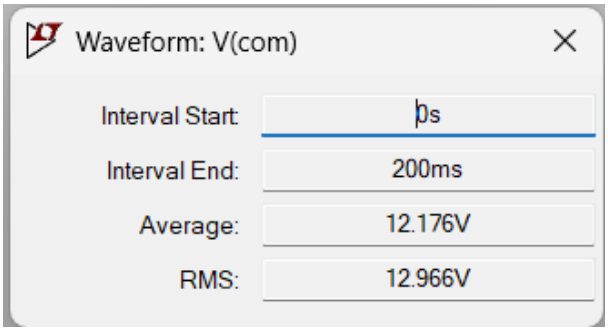

Figure 33. Vcom Value at V+ = 90V

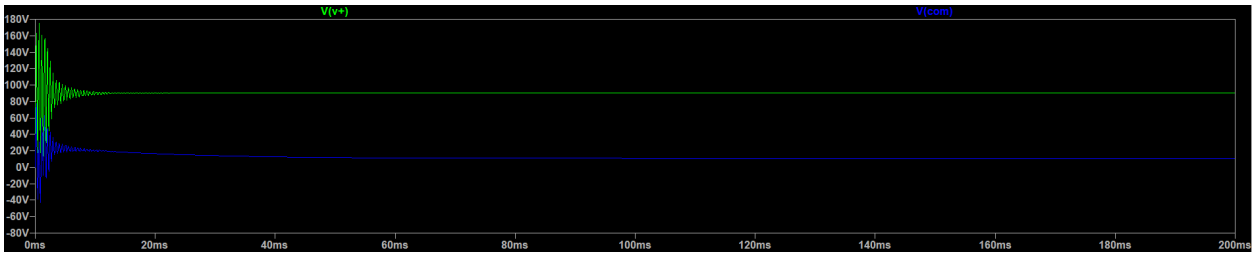

Figure 34: V+ and Vcom Waveforms at V+ = 90V

7.4 AB Amplifier Simulations

7.4.1 Output Power and Voltage

Maximum output power and voltage for the AB amplifier were measured on the 1 kHz transient simulation. With an input of a sine wave with 1.5 V amplitude and 1 kHz frequency, a maximum average power was measured to be 84.547W. The peak output voltage was 26.022 V_{RMS} , or 36.8 V_{peak}. The waveforms for output power and voltage are shown in Figure 35.

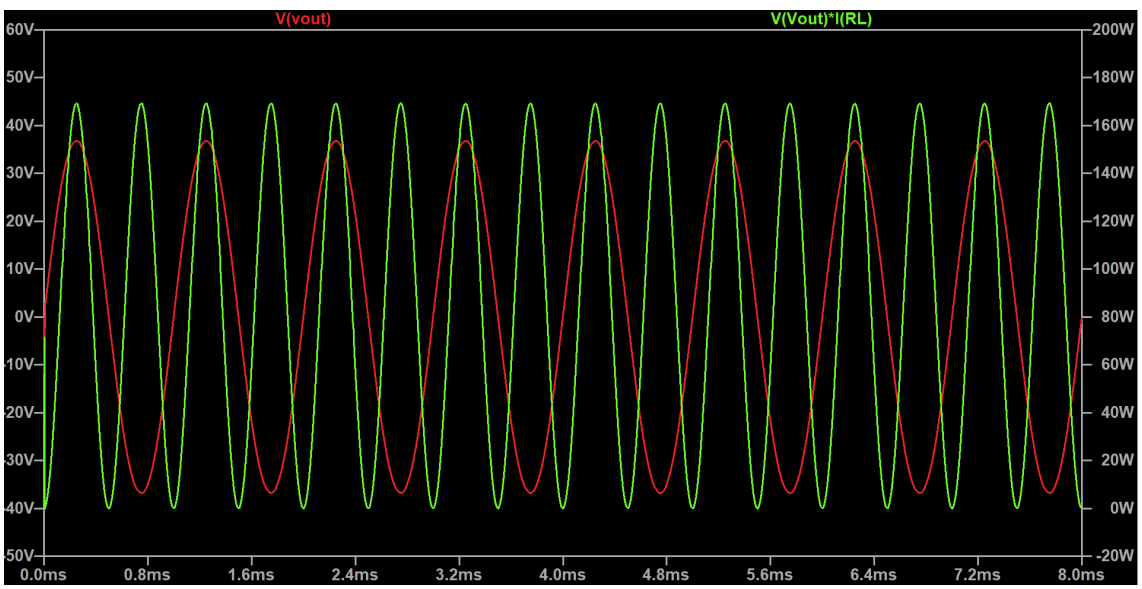

Figure 35: Maximum Output Voltage and Power

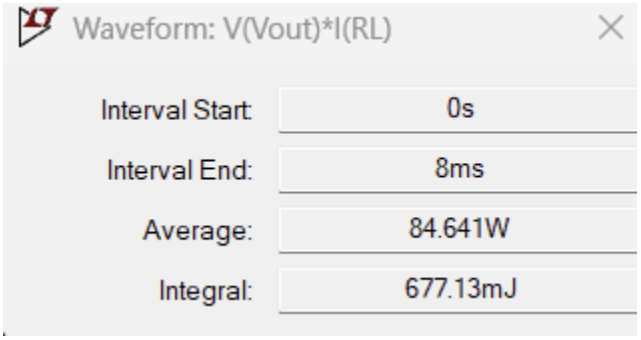

Figure 36: Maximum Output Power Measurement

7.4.2 Total Harmonic Distortion

In a transient simulation with a sine wave input of 1 V amplitude and 1 kHz, the FFT of the output was captured as well as the total harmonic distortion calculated by LTspice. The total harmonic distortion calculated was 0.006567%, but this is an idealized case and the actual THD will most likely be greater than this. The THD calculation also appeared to vary with changes in the maximum timestep that is defined in the transient simulation options in LTspice. Figure 37 shows the harmonic components and the THD calculation.

```
Fourier components of  V(vout)
N-Period=4
DC component:-0.00512715

Harmonic     Frequency     Fourier     Normalized    Phase       Normalized
 Number        [Hz]       Component    Component   [degree]     Phase [deg]
    1        1.000e+03   2.300e+01   1.000e+00     90.43Â°       0.00Â°
    2        2.000e+03   2.262e-04   9.835e-06    102.62Â°      12.19Â°
    3        3.000e+03   1.278e-03   5.556e-05    179.54Â°      89.11Â°
    4        4.000e+03   1.498e-04   6.515e-06    -85.94Â°    -176.37Â°
    5        5.000e+03   1.223e-03   5.318e-05   -179.74Â°    -270.16Â°
    6        6.000e+03   5.893e-05   2.562e-06    -83.63Â°    -174.05Â°
    7        7.000e+03   1.050e-03   4.567e-05   -179.80Â°    -270.23Â°
    8        8.000e+03   3.849e-05   1.674e-06    -75.40Â°    -165.82Â°
    9        9.000e+03   9.294e-04   4.041e-05   -179.82Â°    -270.25Â°
   10        1.000e+04   2.464e-05   1.071e-06    -63.09Â°    -153.52Â°
Partial Harmonic Distortion: 0.009891%
Total Harmonic Distortion:   0.006567%
```

Figure 37: Total Harmonic Distortion and Fourier Analysis Results in LTSpice

7.4.3 Noise and SNR

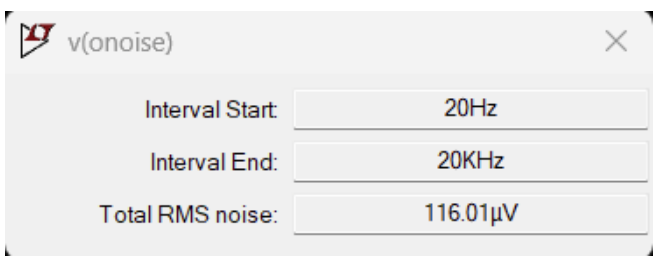

Figure 38: Total RMS Noise

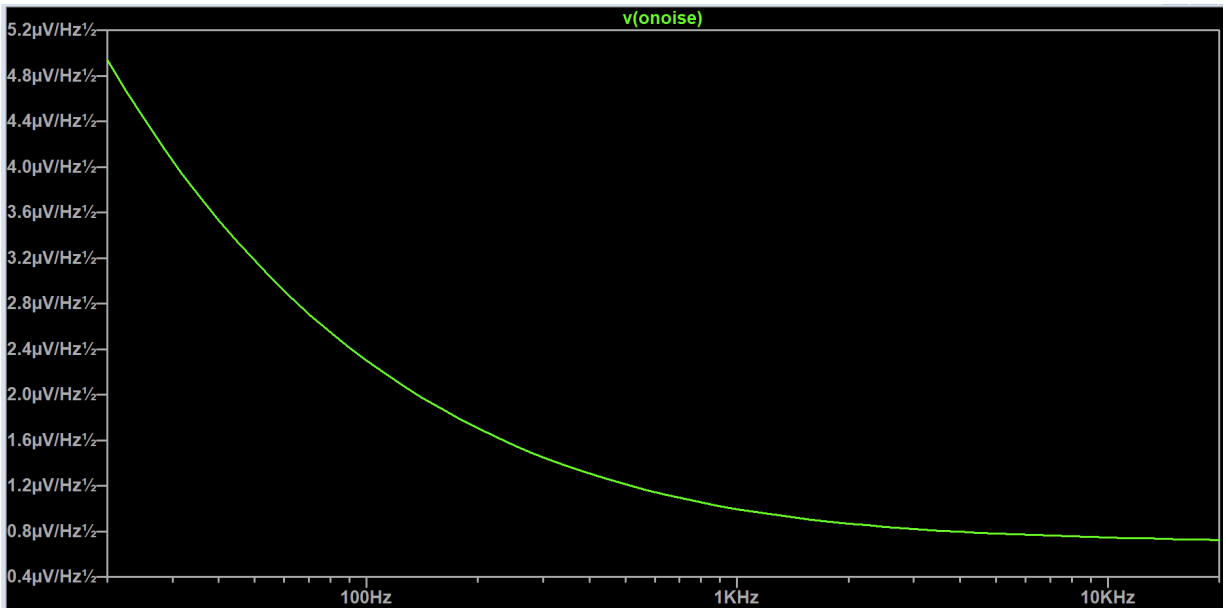

Figure 39: Noise Measured at Vout of Amplifier

The total measured RMS noise at the output in the simulation was 116 µV and the waveform is shown in Figure 39. The signal to noise ratio was calculated using the equation below from [10]

$$SNR\ (dB)\ =\ 20\ \times\ log_{10}\ \frac{V_{signal,RMS}}{V_{noise,RMS}} \tag{7.1}$$

With a 1 V amplitude input, the calculated SNR was 75.7 dB. The LTspice simulation is an optimistic prediction as it does not consider factors that would occur in the environment.

7.4.4 Frequency Response

The frequency response was measured using an AC Analysis simulation with a decade sweep starting at 20 Hz and ending at 1 MHz. The result is shown in Figure 40. The -3 dB point was at about 81 kHz, seen in Figure 41, meaning the frequency response is 20Hz to 81 kHz.

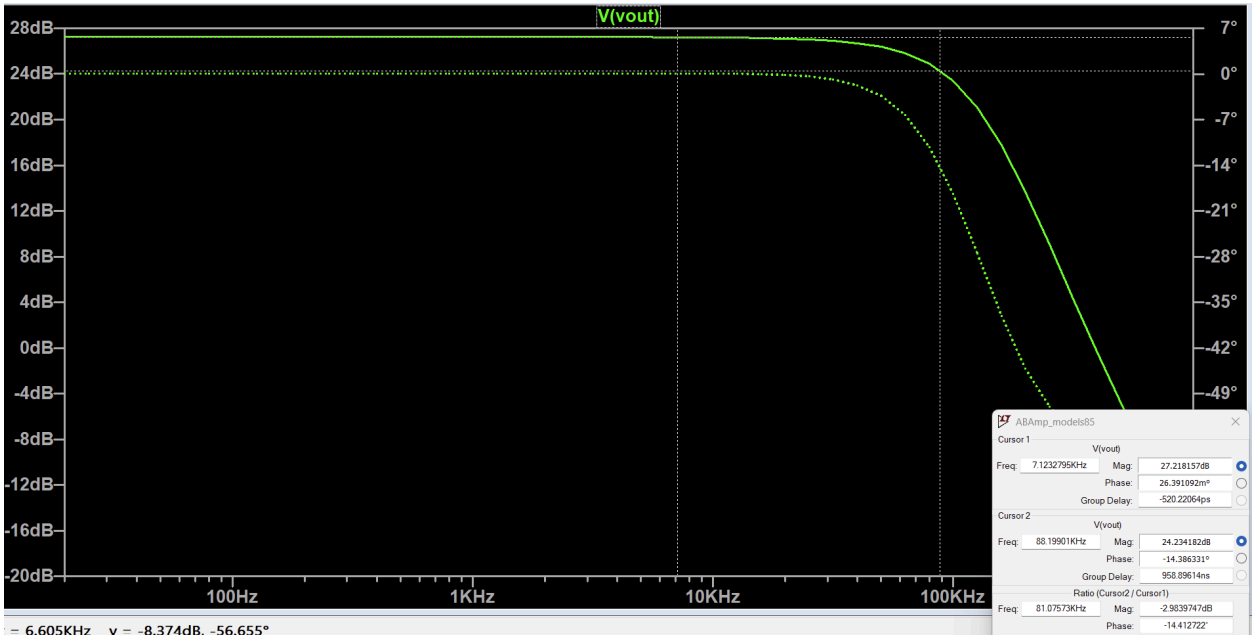

Figure 40: Frequency Response

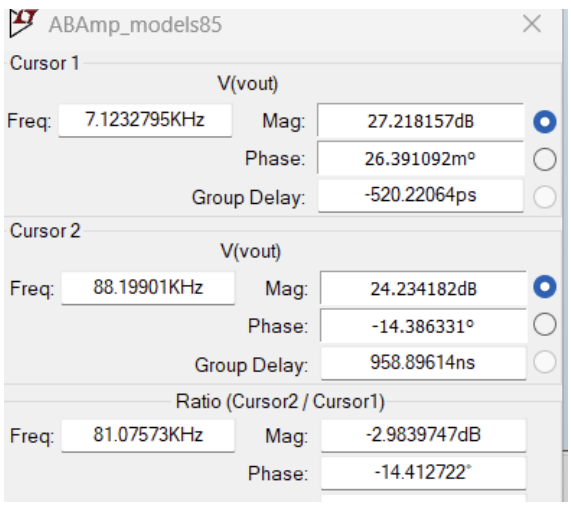

Figure 41: Magnitude and Frequency Measurements

7.5 Physical Testing Data

All data was gathered as described in the testing procedure, however data on maximum power was not obtained. The frequency response was measured as described in the testing procedure document. The frequency response data was then plotted in MATLAB, shown in Figure 42. From the figure, it can be seen that the -3dB point is at 118kHz, so the frequency response is 20Hz - 118kHz.

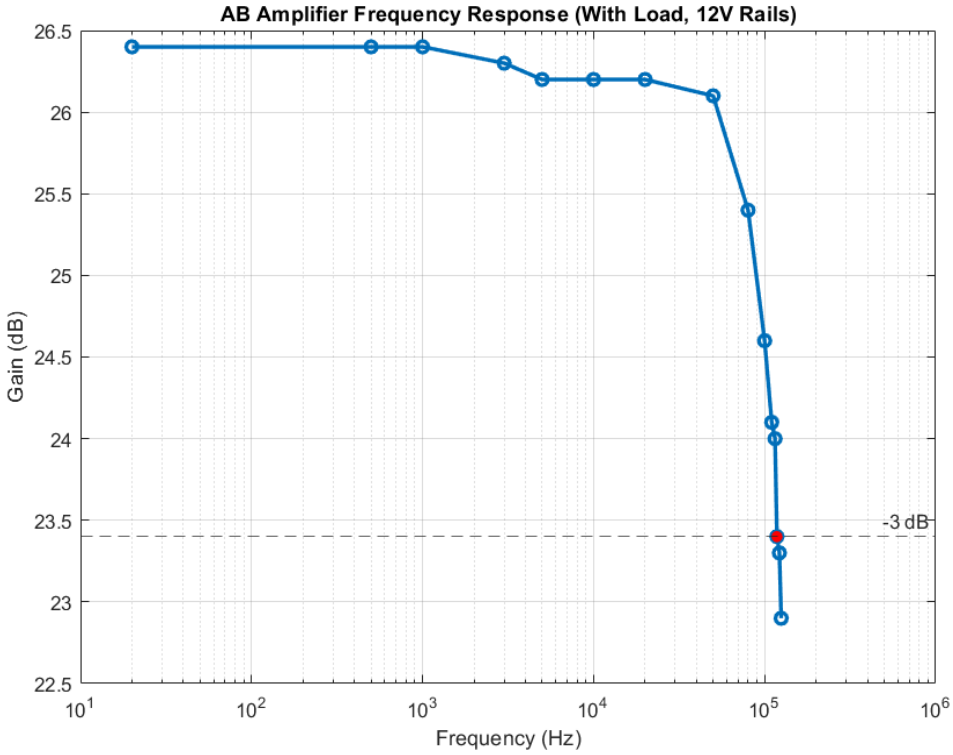

Figure 42: Frequency Response Plot

The THD data was gathered using the FFT setting on the oscilloscope and using equation 7.2. An example of the measurement using the FFT setting is shown in Figure 43. The first 7-110 harmonics were measured, where the fundamental frequency was 1kHz. Table 9 shows an example of one set of FFT measurements, where the calculated THD from the data was 0.03417, or 3.4%.

Figure 43: FFT Measurement

$$THD = \frac{\sqrt{V_2^2+V_3^2+V_4^2+...+V_n^2}}{V_1} \quad (7.2)$$

Table 9: THD Harmonics with 8Ω Load, 0.25Vpp 1kHz Sine, ±10V rails

Harmonic	dBV	V_{RMS}
1	3.125	1.43301257
2	-26.25	0.04869675252
3	-46.875	0.004531583638
4	-61.25	0.0008659643234
5	-53.75	0.002053525026
6	-66.875	0.0004531583638
7	-70.625	0.0002942727176

The SNR measurement was 53.5dB without a load and 55.01dB with a load. These measurements were taken at small inputs where no clipping was present. Additional testing should be done with a larger input.

8. Sponsors/Acknowledgements

Our project is not currently sponsored.

9. Standards

Open Source Hardware Standards [12]:

1. Documentation
2. Scope
3. Necessary Software
4. Derived Works
5. Free Redistribution
6. Attribution
7. No Discrimination Against Persons or Groups
8. No Discrimination Against Fields of Endeavor
9. Distribution of License
10. License Must Not Be Specific to a Product
11. License Must Not Restrict Other Hardware or Software
12. License Must Be Technology-Neutral

10. Recommendations for Future Work

Further testing is required for the final rendition of the rail follower board separately and the combination of the rail follower, rail splitter, and AB amplifier. Results gathered while testing the rail splitter and AB amplifier indicate that distortion can be improved, potentially through edits of the rail follower board as there was noticeable ringing during operation. The current device was not able to be tested up to its maximum output due to limitations on available equipment, so further testing is needed for that to understand its maximum load conditions and how those can be improved. Additional testing with distortion using more precise equipment or measurement techniques can give a more accurate measurement. Finally, the addition of heat sinks could further improve the thermal management.

11. References

[1] N. Utomo et al., “An 85.1% Peak Efficiency, Low Power Class H Audio Amplifier With Full Class H Operation,” IEEE transactions on circuits and systems. I, Regular papers, vol. 70, no. 12, pp. 1–13, 2023, doi: 10.1109/TCSI.2023.3305622.

[2] S. Munz, “Slew Rate in Audio Amplifiers - What Does it Mean?,” Audioholics, Feb. 08, 2013. https://www.audioholics.com/audio-amplifier/amplifier-slew-rate

[3] “Cambridge Audio,” *Cambridge Audio*. https://www.cambridgeaudio.com/usa/en/blog/amplifier-specifications

[4] “What is Total Harmonic Distortion (THD)?,” *Audiophile On*, Aug. 16, 2025. https://www.google.com/url?q=https://www.audiophileon.com/news/what-is-total-harmonic-distortion-thd&sa=D&source=docs&ust=1764909876439016&usg=AOvVaw1L640sjTA-tfl3lK8r8XUv
[5] V. Batra, “Modular Concepts: What is an Envelope Follower?,” Perfect Circuit, Aug. 22, 2024. https://www.perfectcircuit.com/signal/envelope-followers
[6] “What’s the difference between MOSFET and BJT and how to choose?,” NextPCB. https://www.nextpcb.com/blog/what-is-the-difference-between-mosfet-and-bjt-and-how-to-choose
[7] A. Sedra and K. Smith, Microelectronic Circuits. S.L.: Oxford Univ Press US, 2019.
[8] O. Jørgensen, “What do different amplifier classes mean?,” *Dynaudio.com*, May 14, 2025. https://dynaudio.com/magazine/2025/may/amplifier-classes-ask-the-expert
[9] D. Self, Audio Power Amplifier Design, Sixth. Burlington ; Oxford: Elsevier / Focal Press, 2013.
[10] Cadence PCB Solutions, “What is Signal to Noise Ratio and How to calculate it?,” *resources.pcb.cadence.com*, 2023. https://resources.pcb.cadence.com/blog/2020-what-is-signal-to-noise-ratio-and-how-to-calculate-it
[12]“OSHW,” Freedomdefined.org, 2023. https://freedomdefined.org/OSHW

This was also used as a general reference for various amplifier topics and designs that were not directly referenced in this report:

[13] B. Cordell, *Designing Audio Power Amplifiers*. McGraw Hill Professional, 2010.

12. Appendix

Michigan Technological University
Enterprise Program

Project Report Checklist

CHECKLIST FOR PROJECTS ENT 4950/60

A copy of this checklist must be submitted with the project report.

ABET Requirement:

1. Have you reviewed relevant industry standard(s) pertaining to your project and applied the necessary ones?	Yes ☑	
2. Have you included a list of the standards used in project documentation? Where: Section 9 of the Class H Report	Yes ☑	
3. Has your design considered public health, safety, and welfare	Yes ☑	Not Applicable ☐
4. Has your design/solution considered the following factors:		
a. global factors	Yes ☑	Not Applicable ☐
b. cultural factors	Yes ☑	Not Applicable ☐
c. social factors	Yes ☑	Not Applicable ☐
d. environmental factors	Yes ☑	Not Applicable ☐
e. economic factors	Yes ☑	Not Applicable ☐

Project work

1. Does the report have a one page Executive Summary that can be read on its own?	Yes ☑	No ☐
2. Does you project report have a clear problem statement	Yes ☑	No ☐
3. If this is a continuation from a previous semester/ year, is the previous work described appropriately in the report?	Yes ☑	No ☐
4. Have you described the relevant constraints to your design/solution?	Yes ☑	No ☐
5. Have you documented the different design options considered before arriving at the final design/solution?	Yes ☑	No ☐

6. Have you included recommendations for future work	Yes ☑	No ☐

Project Sponsor

1. Have you received explicit permission from your sponsor to share details about the project or client?	Yes ☑	No ☐